Pablo®

2018

NEW PRODUCTS

See the Light

ABOUT PABLO DESIGNS

Pablo's designs have been propelled to the forefront of American contemporary lighting by an uncompromising devotion to simplicity and utility. By fusing the highest technical sensibilities with the most appropriate material palette, Pablo is able to create unique, timeless designs with the power to transform any environment. Pablo was founded in San Francisco in 1993 by Venezuelan born industrial designer Pablo Pardo. Embracing a less-is-more ideology, Pablo frequently challenges traditional design metaphors, developing more practical solutions distilled down to their essence, form and light. A common thread links all of its creations, valuing permanence and sustainability, discarding the disposable mindset so prevalent today. Its mission is to create designs that deepen the relationship between objects, their users, and their environments.

FOUNDER / CREATIVE DIRECTOR

Pablo Pardo

With the creation of his first product in 1993, Pablo established a powerful and generative design philosophy. Since then, his core principles have informed the development of every light in the studio's 25-year history. These products continue to move with culture while withstanding trends in design and each one carries the underlying uniqueness that is distinctly "Pablo."

DESIGN COLLABORATIONS

Brad Ascalon

Brad Ascalon's multidisciplinary Manhattan studio was founded in 2006. With a reductive approach to his craft, Ascalon believes in design that is uncomplicated, rational and manages to find the perfect balance of form, function and concept. Ascalon's work has been exhibited around the world, and in 2013 he was singlehandedly invited to represent American design with an installation at Moscow Design Week. Ascalon earned a Masters' degree for Industrial Design from New York's Pratt Institute in 2005, and that same year was recognized by Wallpaper magazine as one of the "Ten Most Wanted" emerging designers in the world. He attributes his passion for design to the two generations before him who instilled the value of craftsmanship and rigor.

Pablo Studio

The Pablo Studio is a small group of makers and inventors with a diverse background in industrial design and craft, and a deep understanding of manufacturing, materials and technology. They aim to foster a sense of discovery and deeply personal utility in people's interaction with objects. In beginning a new project, the team isolates a concept, meticulously refines it, and then reduces it to its central principle. The studio requires each design element to contribute to the essence of an object, following the Pablo philosophy of "less is more." Pablo Studio works together to develop products that offer people unique experiences and broaden the field of lighting design.

PRODUCT FAMILIES

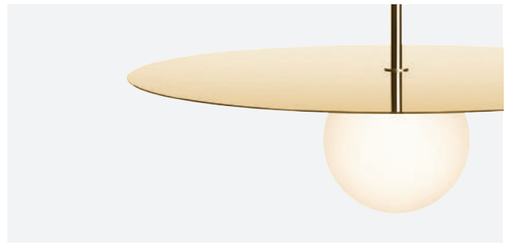

BOLA DISC / BOLA FELT
6-19

BELMONT
20-27

CIELO XL
28-33

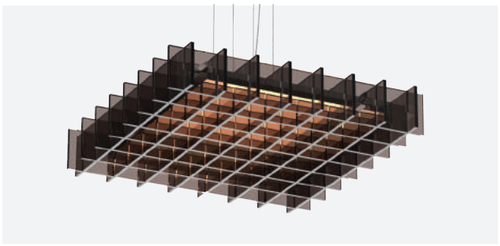

GRID
34-37

BOLA DISC

Bola Disc is a uniquely expressive LED Pendant system featuring a distinctive range of chromated disc reflectors that give the illusion of weightlessness by mirroring its surroundings. Bola Disc pairs an elegant globe diffusor made of opaline glass with exquisitely polished stainless steel or aluminum discs in chrome, brass, rose gold and lacquered white to appease the most discerning tastes. Dependent on size, Bola provides up to 1550 lumens of warm ambient light and is fully dimmable, providing unparalleled illumination. Bola can be suspended individually, in series, or as striking chandelier groupings for residential, contract, and hospitality settings alike. Bola Disc is also available in 2 elegant table models to add warmth to any space.

Designer:
Pablo Pardo + Pablo Studio 2017

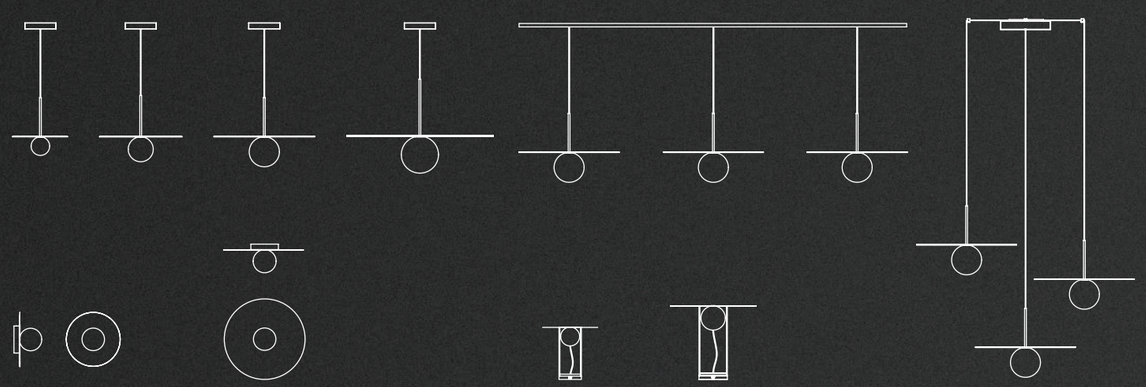

BOLA DISC PENDANT

DESCRIPTION
Bola Disc is a uniquely expressive LED luminaire that pairs a striking chromated disc reflector with an opaline glass globe creating a captivating combination to give the illusion of weightlessness by mirroring its surroundings. Available in pendant, flush and table models, Bola Disc features four exquisitely polished stainless steel or aluminum discs in chrome, brass, rose gold, and gloss laquered white to bring a touch of opulence to any space. The pendant model is available in 4 distinct sizes 12"(30cm), 18"(46cm), 22"(56cm), 32"(81cm) while flush and table models are available in 12"(30cm) and 18"(46cm) sizes. Dependent on size, Bola provides up to 1550 lumens of fully dimmable warm ambient light, providing unparalleled illumination for residential, contract, and hospitality settings alike.

FIXTURE TYPE
Pendant

LIGHT SOURCE
LED High-Output chip on board

MODELS
Bola Disc 12, 18, 22, 32

LIGHT CONTROL
Hard-wired, dimmable

FEATURES
Shade Options: 12"(30cm), 18"(46cm), 22"(56cm), 32"(81cm) Discs

SPECIFICATIONS
Voltage: 120 or 240V 50/60Hz
Power Consumption: 8W (12", 18"), 15W (22"), 20W (32")
Color Temperature: 2700K
Luminosity: 560 Lumens (12"), 640 Lumens (18"), 1160 Lumens (22"), 1550 Lumens (32")
Luminaire Efficacy: 57 Lumens/Watt
Color Rendition Index: 95 CRI
50K hour lifespan
Cord Length: 10' (3m) (Field cuttable)
ELV Dimmer recommended

CERTIFICATIONS

Intertek CE

PACKAGING WEIGHT AND DIMENSIONS

Bola Disc 12 (Steel Shade)	4LBS 1.8KG	15" X 7" 38cm X 18cm
Bola Disc 12 (White Aluminum Shade)	2.4LBS 1.1KG	15" X 7" 38cm X 18cm
Bola Disc 18 (Steel Shade)	8.6LBS 3.9KG	20.75" X 8" 53cm X 20cm
Bola Disc 18 (White Aluminum Shade)	6.75LBS 3KG	20.75" X 8" 53cm X 20cm
Bola Disc 22 (Steel Shade)	12.25LBS 5.6KG	24" X 10" 61cm X 25cm
Bola Disc 22 (White Aluminum Shade)	9LBS 4.1KG	24" X 10" 61cm X 25cm
Bola Disc 32 (Steel Shade)	23.8LBS 10.8KG	34.5" X 10.5" 87.6cm X 27cm
Bola Disc 32 (White Aluminum Shade)	17.5LBS 7.9KG	34.5" X 10.5" 87.6cm X 27cm

NOTES
Custom requests can be considered on volume orders

FINISHES

BOLA DISC

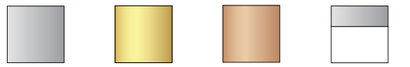

DIMENSIONS

BOLA DISC 12, 18, 22, 32

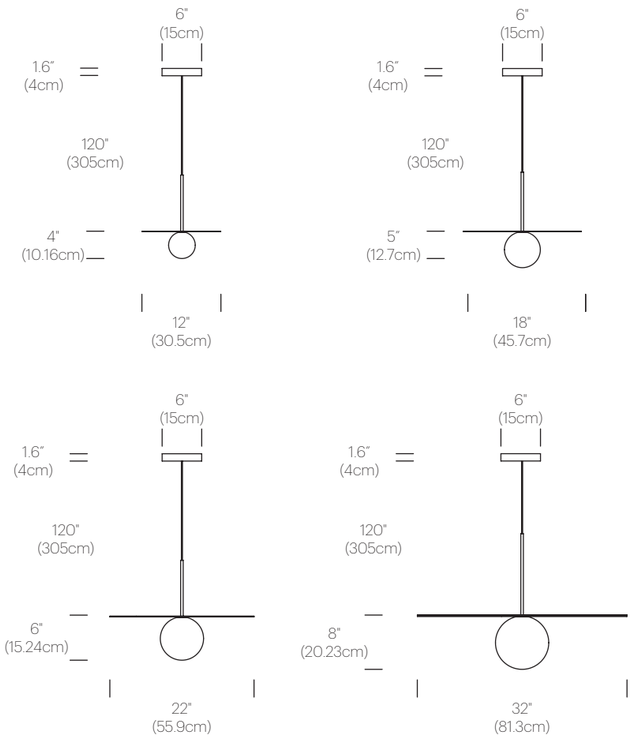

BOLA DISC CHANDELIER

DESCRIPTION
Bola's elegant reflective disc and globe design can be suspended in a variety of custom arrangements with both round and linear canopy solutions. With Bola Chandelier, up to 9 lamps can be grouped together in a variety mixed disc sizes to form stunning luminaire displays. Both size and shape of the grouping is controlled by lamp quantity and positioning relative to the universal canopy. Swag mounts are provided to extend the lights out into space along with an ample cord length of 10' (304cm) to offer a wide array of unique solutions.

FIXTURE TYPE
Pendant

LIGHT SOURCE
LED High-Output chip on board

CERTIFICATIONS

NOTES
Custom requests can be considered on volume orders
*Available August 2018

Round

or

2, 3, 4, 5, 6... 9

Linear

FINISHES

BOLA DISC

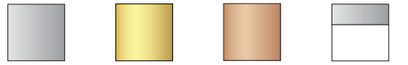

CHROME | BRASS | ROSE GOLD | GLOSS WHITE/ CHROME

BOLA DISC FLUSH

DESCRIPTION
A study in refined simplicity, Bola Flush offers a magical combination of mirror and globe refined down to its bare essentials. The objective with the Bola Flush is to provide both direct and reflected light from either ceiling or wall mounted vantage points. Bola Flush brings elegance and refinement with two sizes and four finishes in white, brass, rose gold, or chrome. An ideal fixture for adding diffused and reflected light in hallway corridors, nooks, dining settings, bedrooms, or living areas. Stunning groupings can also be created by mixing different sizes together to form unique custom light displays

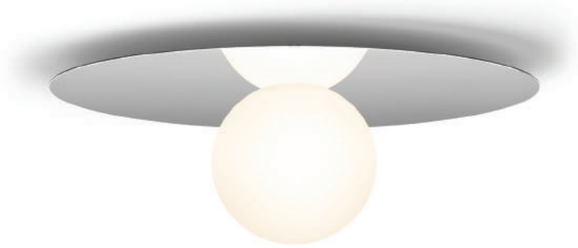

FIXTURE TYPE
Wall/Ceiling

LIGHT SOURCE
LED High-Output chip on board

MODELS
Bola Flush 12, 18

LIGHT CONTROL
Hard-wired, dimmable

FEATURES
Shade Options: 12”(30cm), 18”(46cm)

SPECIFICATIONS
Voltage: 120 or 240V 50/60Hz
Power Consumption: 8W (12”, 18”)
Luminosity: 560 Lumens (12”), 640 Lumens (18”)
Luminaire Efficacy: 57 Lumens/Watt
Color Rendition Index: 95 CRI
50K hour lifespan
Cord Length: 10’ (3m) (Field cuttable)
ELV Dimmer recommended

CERTIFICATIONS

NOTES
Custom requests can be considered on volume orders
*Available August 2018

FINISHES

BOLA DISC

CHROME BRASS ROSE GOLD GLOSS WHITE

DIMENSIONS

BOLA DISC FLUSH 12, 18

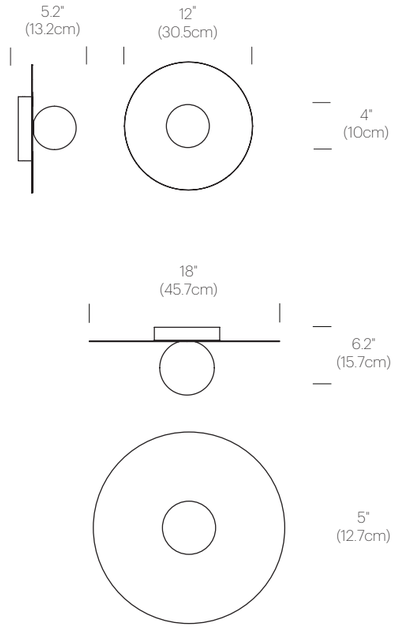

BOLA DISC TABLE

DESCRIPTION
Bola Table's boldly elegant silhouette captures the juxtaposition of exquisite reflective finishes with a simple opaline glass globe diffusor elevated by a clear glass cylinder to give the illusion that the light is floating while tethered to its braided fabric cord. Bola's compact cylindrical base has a matching finish and features full-range dimming with a convenient USB charging port for charging portable devices. Available in two sizes and four chromated finishes in brass, rose gold, chrome and lacquered gloss white, Bola table is perfectly suited for bedroom and living areas in residential and contract environments alike.

FIXTURE TYPE
Table

LIGHT SOURCE
LED High-Output chip on board

MODELS
Bola Disc Table 12
Bola Disc Table 18

LIGHT CONTROL
Full range dim control

FEATURES
Shade Options: 12"(30cm), 18"(46cm)
USB 3.0 charging port

SPECIFICATIONS
Voltage: 120 or 240V 50/60Hz
Power Consumption: 8W (12", 18")
Luminosity: 560 Lumens (12"), 640 Lumens (18")
Luminaire Efficacy: 57 Lumens/Watt
Color Rendition Index: 95 CRI
50K hour lifespan
Cable length: 8' (244cm)

CERTIFICATIONS

NOTES
Custom requests can be considered on volume orders
*Available Fall 2018

FINISHES

BOLA DISC

CHROME | BRASS | ROSE GOLD | GLOSS WHITE

DIMENSIONS

BOLA DISC 12 TABLE
BOLA DISC 18 TABLE

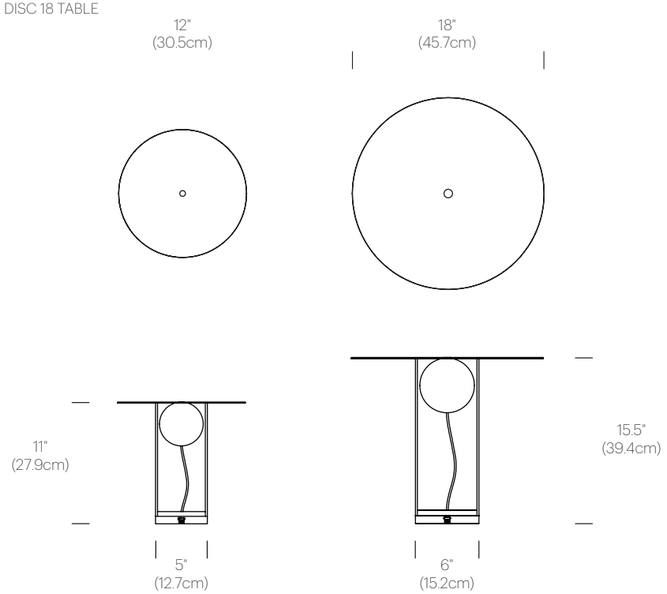

BOLA FELT

Bola Felt's charmingly expressive felted shade hat features a soft and pliable conical structure with 2 colored layers of undulating wool inside and out. Available in 2 distinct sizes: 24" (61 cm) and 32" (81 cm), its shade rests elegantly over its opaline glass globe diffusor allowing the user to tilt the shade to multiple angles to focus light while taking on various relaxed personalities in the process. Bola Felt casts unparalled illumination boasting up to 1550 lumens of warm and dimmable LED light that runs cool to the touch. Bola can be suspended individually, or in spectacular groupings to become the centerpieces of any space. Bola's thick felt shade also offers excellent acoustic dampening benefits making them perfectly suited for use over dining applications as well as social gathering areas where sound control is beneficial. Ideal for residential, lounge and hospitality spaces alike.

Designer:
Pablo Pardo + Pablo Studio 2017

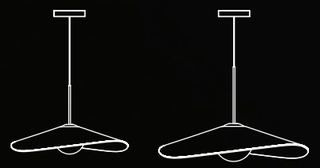

BOLA FELT

DESCRIPTION
Bola Felt's charmingly expressive felted shade hat features a soft and pliable conical structure with 2 colored layers of undulating wool inside and out. Available in 2 distinct sizes: 24" (61 cm) and 32" (81 cm), its shade rests elegantly over its opaline glass globe diffusor allowing the user to tilt the shade to multiple angles to focus light while taking on various relaxed personalities in the process. Bola Felt casts unparalled illumination boasting up to 1550 lumens of warm and dimmable LED light that runs cool to the touch. Bola can be suspended individually, or in spectacular groupings to become the centerpieces of any space. Bola's thick felt shade also offers excellent acoustic dampening benefits making them perfectly suited for use over dining applications as well as social gathering areas where sound control is preferable. Ideal for residential, lounge and hospitality spaces alike.

FIXTURE TYPE
Pendant

LIGHT SOURCE
LED High-Output chip on board

MODELS
Bola Felt 24
Bola Felt 32

LIGHT CONTROL
Hard-wired, dimmable

FEATURES
Adjustable Shade
Acoustic Dampening

SPECIFICATIONS
Voltage: 120 or 240V 50/60Hz
Power Consumption: 15W (24"), 20W (32")
Color Temperature: 2700K
Luminosity: 1160 Lumens (24"), 1550 Lumens (32")
Luminaire efficacy: 57 Lumens/Watt
Color Rendition Index: 95 CRI
50K hour lifespan
Cable Length: 10' (3m) (Field cuttable)
ELV Dimmer recommended

CERTIFICATIONS

Intertek

PACKAGING WEIGHT AND DIMENSIONS

Bola Felt 24	8.75LBS 4KG	24" X 10" 61cm X 25.5cm
Bola Felt 32	16.5LBS 7.5KG	34.5" X 10.5" 87.6cm X 27cm

NOTES
Custom requests can be considered on volume orders

FINISHES

BOLA FELT

PEBBLE/
GREY

DIMENSIONS

BOLA FELT 24, 32

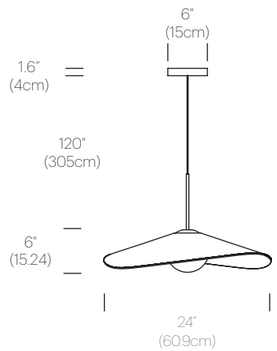

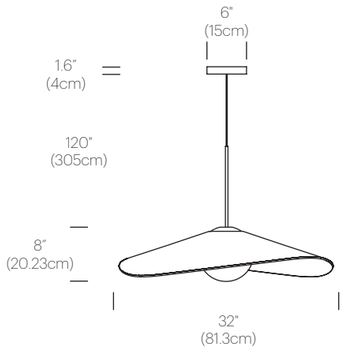

BELMONT

The Belmont Collection was a collaborative creation with designer Brad Ascalon. Re-envisioning the traditional fabric shade lamp, but with the warmth and preciousness of hand crafted furniture. Belmont's iconic, yet reductive form creates a natural canvas for displaying an exquisite array of textiles from premium wool to colorful woven fabrics that can be paired with a solid crafted oak wood armature. Belmont Pendant can be hung individually or in stunning groupings to provide warm and comfortable illumination to complement any residential, contract, or hospitality setting. Belmont is also available in stunning table and floor standing models to bring warmth and beauty to any environment.

Designer:
Brad Ascalon 2017

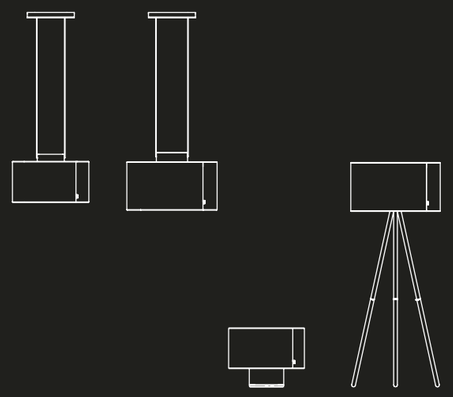

BELMONT PENDANT

DESCRIPTION
The Belmont Collection was a collaborative creation with designer Brad Ascalon re-envisioning the traditional fabric shade lamp, but with the warmth and preciousness of hand crafted furniture. Belmont's iconic, yet reductive form creates a natural canvas for displaying an exquisite array of textiles from premium wool to colorful woven fabrics that can be paired with a solid crafted oak wood armature. The Belmont Pendant can be hung individually or in stunning groupings to provide warm and comfortable illumination to complement any residential, contract, or hospitality setting.

FIXTURE TYPE
Pendant

LIGHT SOURCE
High output LED array

MODELS
Belmont 22
Belmont 26

LIGHT CONTROL
Hard-Wired
Fully dimmable with ELV dimmers

FEATURES
Matching wood canopy

SPECIFICATIONS
Voltage: 120/240V 50-60Hz
Power Consumption: 30W
Color temperature: 2700K
Luminosity: 1200 Lumens
Color Rendition Index: 95 CRI
50K hour lifespan
Cable length: 10' (3m) (Field cuttable)
ELV Dimmer recommended

CERTIFICATIONS
Intertek

PACKAGING WEIGHT AND DIMENSIONS

Belmont 22	8.75LBS	22.5" X 18"
	4KG	57cm X 45.5cm
Belmont 26	10.4LBS	26.5" X 21"
	4.7KG	67cm X 53cm

FINISHES

WOOD

OAK

FABRIC

SILVERDALE CHARCOAL DIJON CELESTE

DIMENSIONS

BELMONT 22, 26

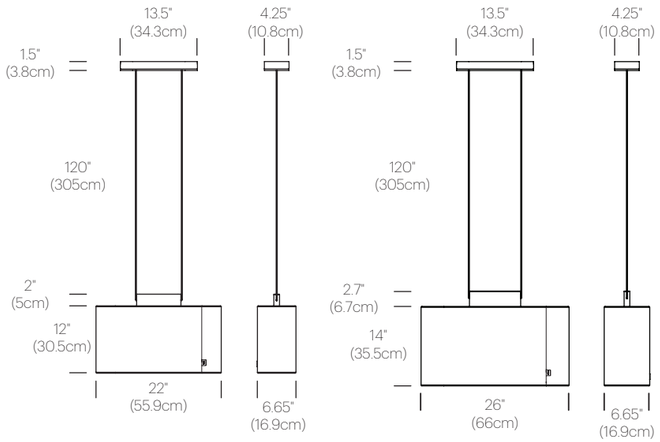

NOTES
Custom requests can be considered on volume orders

BELMONT TABLE

DESCRIPTION
An elegant interplay of proportion and material, the Belmont Table Lamp (2018) is designed to illuminate interiors from modern to traditional. Its iconic shade form is comprised of premium wool felt fabric that is delicately balanced over a contrasting hand-crafted solid wood base in oak or walnut. Belmont's unique base also features full range dimming to set the perfect ambiance while a convenient USB port offers charging capability for all your mobile devices. Belmont table sits perfectly in residential as well as hospitality and contract environments offering a low setting light solution with a warm and bright LED luminaire for a lifetime of maintenance free service. Four standard shade colors are interchangeable with 2 wood base finishes.

FIXTURE TYPE
Table

LIGHT SOURCE
High output LED array

MODELS
Belmont Table 22

LIGHT CONTROL
Full range dim control

FEATURES
USB 3.0 charging port

SPECIFICATIONS
Voltage: 120/240V 50-60Hz
Power Consumption: 24W
Color temperature: 2700K
Luminosity: 900 Lumens
Color Rendition Index: 95 CRI
50K hour lifespan
Cable length: 8' (244cm)

CERTIFICATIONS

Intertek

PACKAGING WEIGHT AND DIMENSIONS		
Belmont Table	12LBS	22.5" X 18"
	5.5KG	57cm X 45.5cm

NOTES
Custom requests can be considered on volume orders
*Available Fall 2018

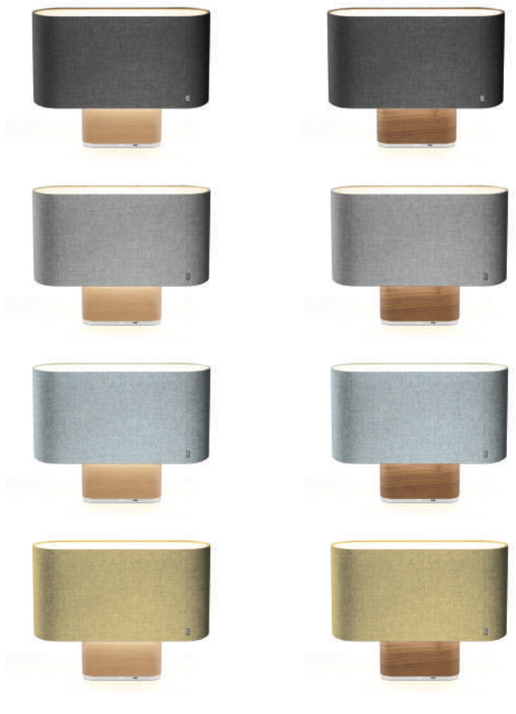

FINISHES

WOOD

OAK WALNUT

FABRIC

CHARCOAL SILVERDALE CELESTE DIJON

DIMENSIONS

BELMONT TABLE

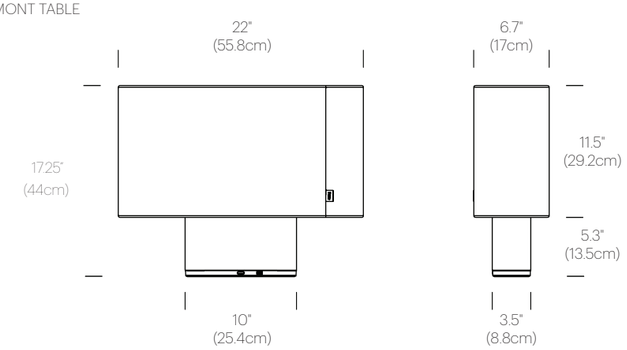

BELMONT FLOOR

DESCRIPTION
An elegant interplay of proportion and material, the Belmont Floor Lamp (2018) is designed to illuminate interiors from modern to traditional. Its iconic shade form is comprised of premium wool felt fabric that is delicately balanced over a contrasting tri-pod leg assembly hand-crafted from solid oak or walnut. Belmont floor's majestic frame stands at a 65" (162cm) height providing ample illumination in any living area and is perfectly suited for residential as well as hospitality and contract environments alike. Featuring 2700K warm and bright (2700K) LED illumination, Belmont Floor provides up to 50K hours of maintenance free service. Four standard shade colors are interchangeable with 2 wooden leg post finishes.

FIXTURE TYPE
Floor

LIGHT SOURCE
High output LED array

MODELS
Belmont Floor 26

LIGHT CONTROL
In-line foot switch

FEATURES
Ships flat-packed

SPECIFICATIONS
Voltage: 120/240V 50-60Hz
Power Consumption: 24W
Color temperature: 2700K
Luminosity: 900 Lumens
Color Rendition Index: 95 CRI
50K hour lifespan
Cable length: 9' (274m) (Field cuttable)

CERTIFICATIONS

PACKAGING WEIGHT AND DIMENSIONS

Belmont Floor	13LBS	26.5" X 21"
	6KG	67cm X 53cm

NOTES
Custom requests can be considered on volume orders
*Available Fall 2018

FINISHES

WOOD

OAK

WALNUT

FABRIC

SILVERDALE

CHARCOAL

DIJON

CELESTE

DIMENSIONS

BELMONT FLOOR 26

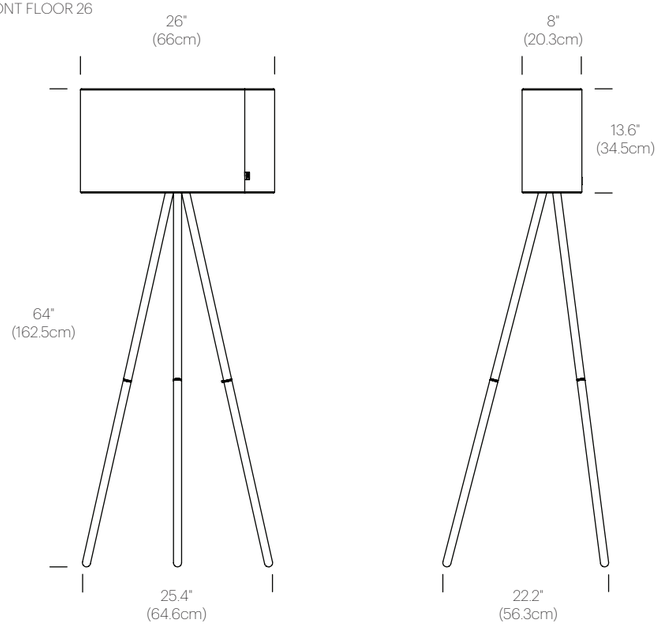

CIELO XL

The minimalist Cielo pendant Series is expanding to include the stunning new Cielo XL, a taller and slimmer design offering premium machined aluminum finishes and boasting a warm and brilliant 1200 lumen output. Cielo XL is scaled perfectly for hospitality and residential environments alike and can be suspended individually, in a series or as chandelier groupings to provide directional illumination that is both perfectly balanced and glare free. Cielo XL is fully dimmable and employs state of the art flat panel LED technology which is rated for up to 50K hours of use.

Designer:
Pablo Studio 2017

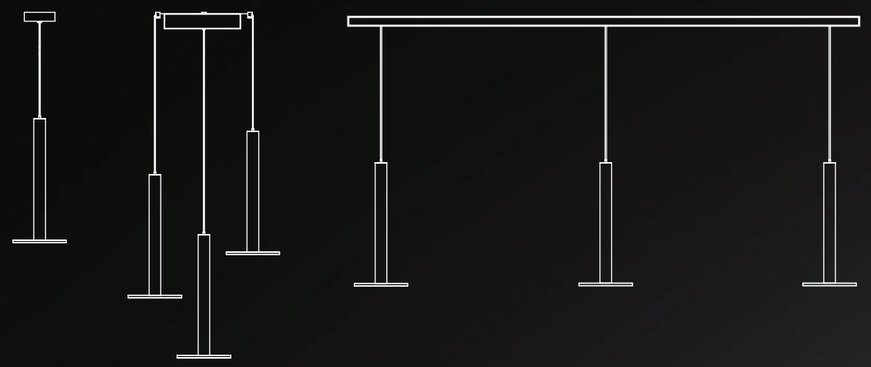

CIELO XL

DESCRIPTION
The minimalist Cielo pendant Series is expanding to include the stunning new Cielo XL, a taller and slimmer design offering premium machined aluminum finishes and boasting a warm and brilliant 1200 lumen output. Cielo XL is scaled perfectly for residential and hospitality environments alike and can be suspended individually, in a series or as chandelier groupings to provide focused illumination that is both perfectly balanced and glare free. Cielo XL is fully dimmable and employs state of the art flat panel LED technology which is rated for up to 50K hours of use.

FIXTURE TYPE
Pendant

LIGHT SOURCE
LED Flat-Panel

MODELS
Cielo XL

LIGHT CONTROL
Hard-wired
Fully dimmable

FEATURES
Energy efficient flat panel technology
Glare-free illumination

SPECIFICATIONS
Voltage: 120 or 240V 50/60Hz
Power Consumption: 18W
Color Temperature: 2700K
Luminosity: 1200 Lumens
Luminaire efficacy: 58 Lumens/Watt
Color Rendition Index: 91 CRI
50K hour lifespan
Cable Length: 10’ (3m) (Adjustable height)
ELV Dimmer recommended

CERTIFICATIONS

FINISHES

DIMENSIONS
CIELO XL

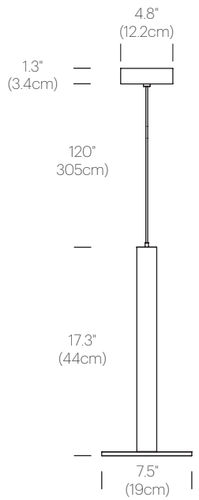

PACKAGING WEIGHT AND DIMENSIONS

Cielo XL:	4.25LBS	8” X 19.5”
	2KG	20cm X 49.5cm

NOTES
Custom requests can be considered on volume orders

CIELO XL CHANDELIER

DESCRIPTION
Cielo XL chandelier's stunning machined aluminum design can be suspended in a variety of unique custom arrangements with both round and linear canopy solutions. With Cielo XL Chandelier, up to 9 lamps can be grouped together in a variety mixed sizes to form impressive luminaire displays. Both size and shape of the grouping is controlled by lamp quantity and positioning relative to the universal canopy. Swag mounts are provided to extend the lights out into space along with an ample height adjustable cord length of 10' (304cm) to offer a wide range of unique custom configurations.

FIXTURE TYPE
Pendant

LIGHT SOURCE
LED Flat-Panel

CERTIFICATIONS
Intertek

NOTES
Custom requests can be considered on volume orders
*Available August 2018

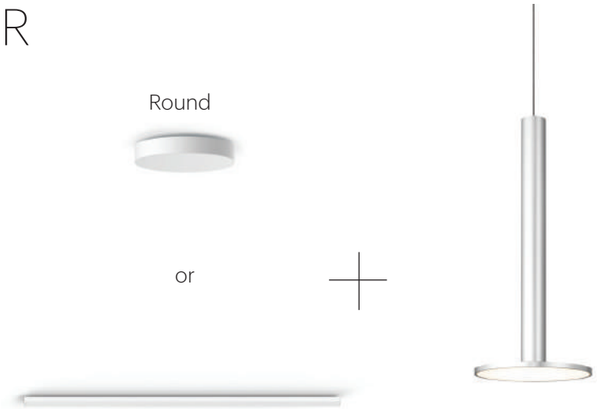

FINISHES

SATIN ALUMINUM · POLISHED ALUMINUM · BRASS · BLACK · GLOSS WHITE

GRID

Inspired by Japanese joinery, Grid conveys a lightness and weightlessness of form in its orderly structured frame of natural wood or optical acrylic. The precision cut slats provide both optimal diffusion from side viewing angles while celebrating a rich palate of natural woods and rich acrylic colorways to direct warm ambient light downward with minimal light spill. Grid can be suspended individually or in series to create uniquely transformative configurations of light and shadow. Perfect for entry foyers, dining areas, work spaces or hallway corridors.

Designer:
Pablo Pardo + Pablo Studio 2017

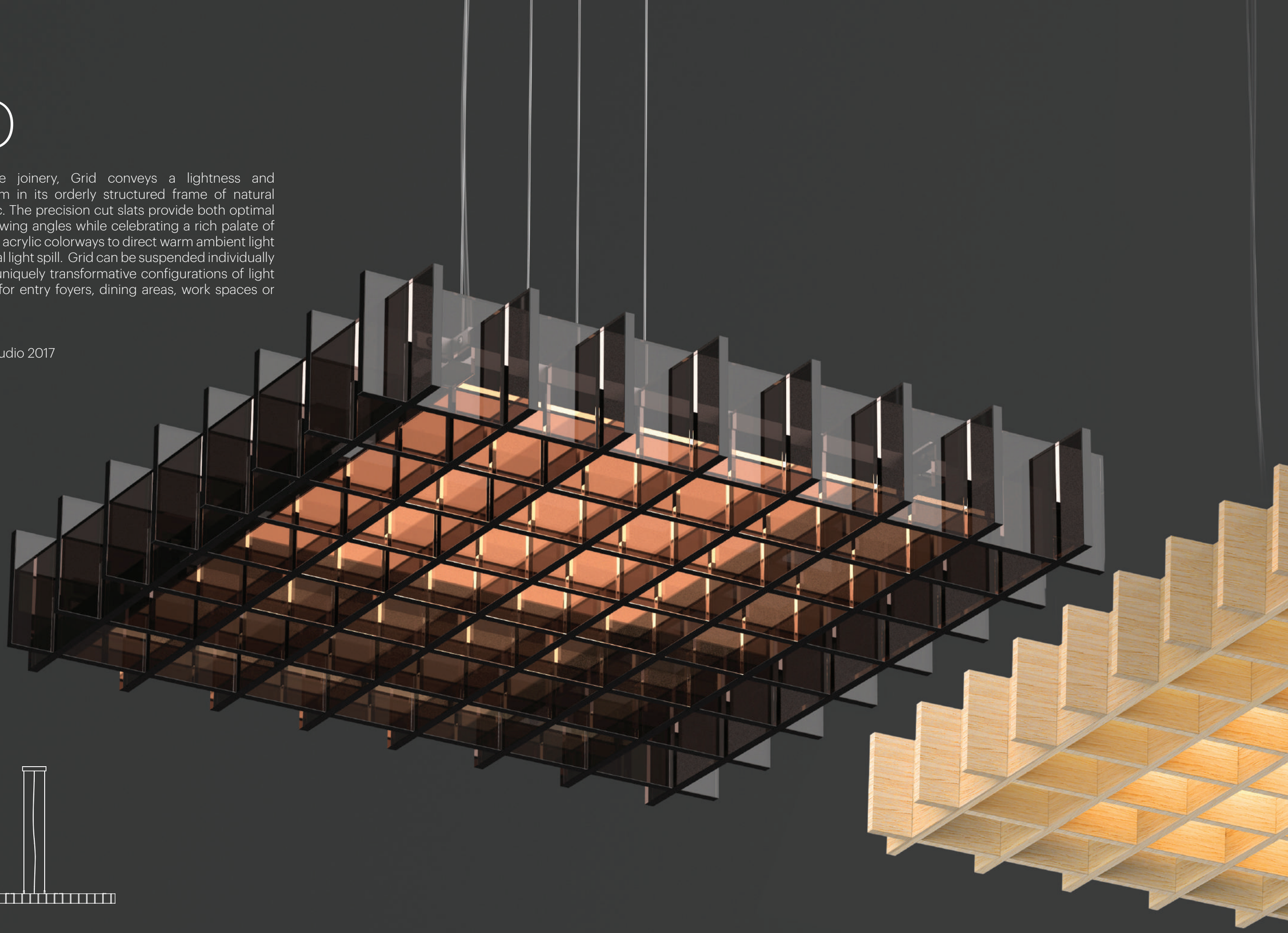

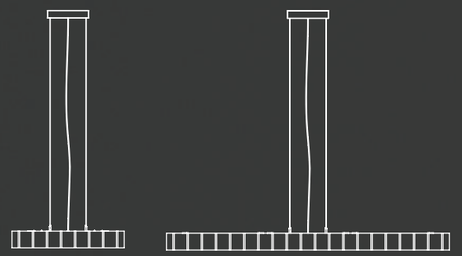

GRID

DESCRIPTION
Grid conveys a lightness and weightlessness of form in its orderly structured frame of natural wood or optically clear acrylic. The CNC cut slats provide both optimal diffusion from side viewing angles while celebrating a rich palate of natural woods and rich acrylic colorways to direct warm ambient light downward with minimal light spill. Grid can be suspended individually or in series to create uniquely transformative configurations of light and shadow. Available in two complementary sizes: 1x1 18.5" (47cm) X 18.5" (47cm) and 1x3: 18.5" (47cm) X 46.3" (118cm), Grid is perfectly suited for illuminating dining, work spaces or corridors with 1500 lumens and 4500 lumens depending on size. Limitless arrangements can be configured.

FIXTURE TYPE
Pendant

LIGHT SOURCE
LED Flat-Panel

MODELS
Grid 1X1
Grid 1X3

LIGHT CONTROL
Hard-wired
Fully dimmable

FEATURES
Energy efficient flat panel technology
Glare-free illumination

SPECIFICATIONS
Voltage: 100 or 240V 50/60Hz
Power Consumption: 20W (1X1), 60W (1X3)
Color Temperature: 2700K
Luminosity: 1500 lm (1X1), 4500 lm (1X3)
Luminaire efficacy: 91 Lumens/Watt
Color Rendition Index: 85 CRI
50K hour lifespan
Cable Length: 10' (3m) (Field cuttable)
ELV Dimmer recommended

CERTIFICATIONS

PACKAGING WEIGHT AND DIMENSIONS

Grid 1X1 (Acrylic)	14LBS 6.25KG	21" X 20" 53cm X 50cm
Grid 1X1 (Wood)	11.4LBS 5KG	21" X 20" 53cm X 50cm
Grid 1X3 (Acrylic)	31.25LBS 14KG	51" X 22" 129.5cm X 56cm
Grid 1X3 (Wood)	24.8LBS 11.25KG	51" X 22" 129.5cm X 56cm

NOTES
Custom requests can be considered on volume orders

FINISHES

WOOD

ASH

ACRYLIC

FROSTED

BRONZE

DIMENSIONS

GRID 1X1, 1X3

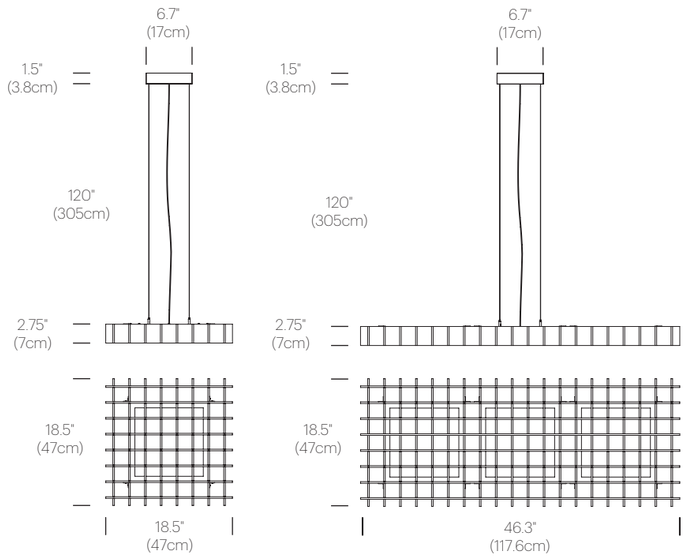

25 YEARS OF ILLUMINATION

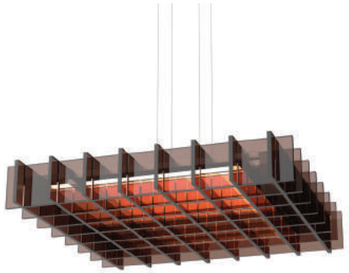

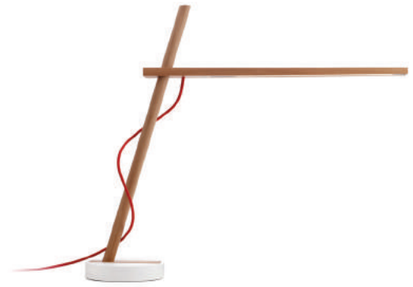

AUSTRIA

Cuuluu - House of Light
Schönbrunner Straße 118/1
1050 Vienna
T: +43 699 1190 0900
E: office@cuuluu.com
www.cuuluu.com

NETHERLANDS

Pablo Designs B.V.
The Netherlands
T: +31 85 888 0858
E: info@pablodesigns.eu
www.pablodesigns.eu

ESTONIA

Hektor Light
Pärnu str. 139C
House of Standard
Tallin
T: +372 615 45 11
E: info@hektor.ee

FRANCE

TOlight Sas
C/O Objets D'Etonnement
20 Av. De La Belle Gabrielle
94130 Nogent Sur Marne
Office: +33 1 48761845
Jerome: +33 6 03404094
jpecnard@wanadoo.fr
Jean-David: +33 6 64290464
jdpottier@wanadoo.fr

GERMANY

ElbLUX
Püttkampsweg 4
22609 Hamburg
T: +49 40 801190
T: +49 170 2371356
E: elblux@elblux.de

ISRAEL

Cley-or Art of Light
6 Hanezach St.
Ramat Hasharon
Israel
T: +972 73 705 5525
E: office@cley-or.co.il

ITALY

TOlight Sas di Gianfausto Abbatinali
Via Passo del Moncenisio, 40
25136 - Brescia
T: +39 030 200 92 32
E: info@tolight.eu
www.tolight.eu

POLAND

Interium Roman Rauch
Ul. Grochowska 234/240
04-368 Warszawa
T: +48 22 303 97 75
E: info@e-interium.pl
www.e-interium.pl

PORTUGAL

DomoLed
Nucleo Empresarial da Abrunheira
Zona Poente, Pav.4 Abrunheira Sintra
2710-089
T: +351 219 111 201
E: geral@domoled.pt

SCANDINAVIA

BUYAPORT Copenhagen aps
Pakhus 47, Sundkaj 7
2150 Nordhavn
Denmark
T: +45 / 39 42 42 92
E: info@buyaport.com
www.buyaport.com

SLOVAKIA

KPP Company
Štefánikova 699/9
905 01 Senica
Slovakia
T: +421 948 440 010
E: info@profisvietidla.sk

SPAIN

Parachilna
Filatures 1-8
08690 Santa Coloma de
Cervello
Barcelona
T: +34 936 307 772
E: avalero@parachilna.eu

SWITZERLAND

Wirzpartner GmbH
Werner-Weber Str 11
CH 8630 Rüti
T: +41 55 260 1960
E: info@wirzpartner.ch

UNITED KINGDOM & IRELAND

McInnes Cook LIGHT
4-5 Rudgate Business Park
Tockwith
North Yorkshire
United Kingdom
YO26 7RD
T: +44 1423 359988
E: info@mcinnescook.com
www.mcinnescook.com

PABLO USA

Pablo Designs
888 Marin Street
San Francisco, CA 94124
T: +1 415 865 5000
F: +1 415 865 0500
E: info@pablodesigns.com
www.pablodesigns.c om

Pablo